Rail

Product Name	Rail
Product Code	GM-R97
Dimensions	W 28xH 48mm
Weight	0.554KGS
Material	AL6005-T5
Surface Finish	Anodized (10 micron)
Packaging	432PCS/Pallet
Standard	CE/TUV/UL

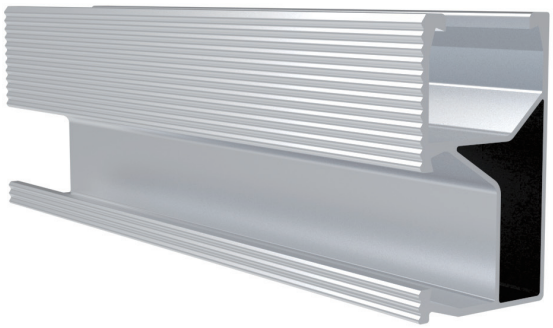

Rail Joiner

Product Name	150mm Earthing Rail Joiner
Product Code	GM-RS-01-L-150
Application	Connect Goomax rails for longer PV array and pierce rails' surfaces for earthing.
Dimensions	W 30xH 25xL 150mm
Weight	0.192KG
Material	AL6005-T5
Surface Finish	Anodized (10 micron)
Packaging	160pcs/carton, 500x300x210mm
Standard	CE/TUV/UL

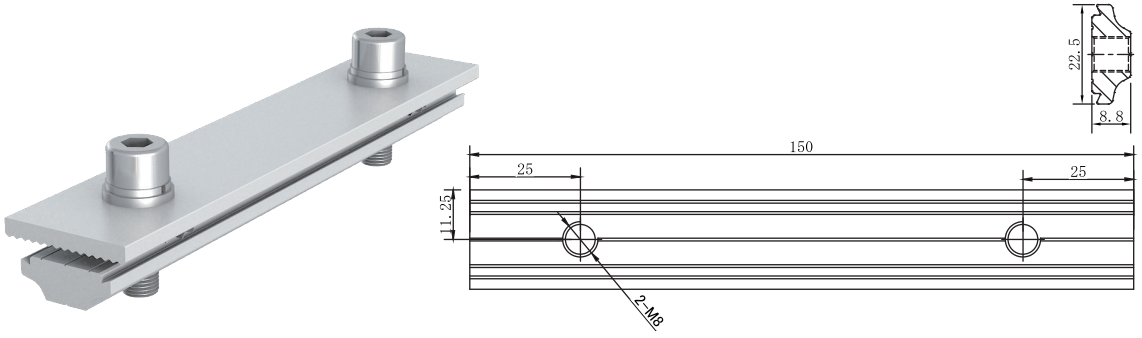

Component List (Qty./Set)			
Joiner	1	T Nut	1
SUS304 Washer Set	2	Hexagon Bolt Set (M8*20)	2
SUS304 Star Washer	2		

Tin Feet

Product Name	L Feet
Product Code	GM-MRH-L5-06-D
Application	AL6005-T5 5crew:SUS410,Rubber washer:EPDM
Dimensions	W 40xH 80xL 40mm
Weight	0.117KG
Material	AL6005-T5/SUS304, Rubber washer: EPDM
Surface Finish	Anodized (10 micron)
Packaging	160pcs/carton, 500x300x210mm
Standard	CE/TUV/UL



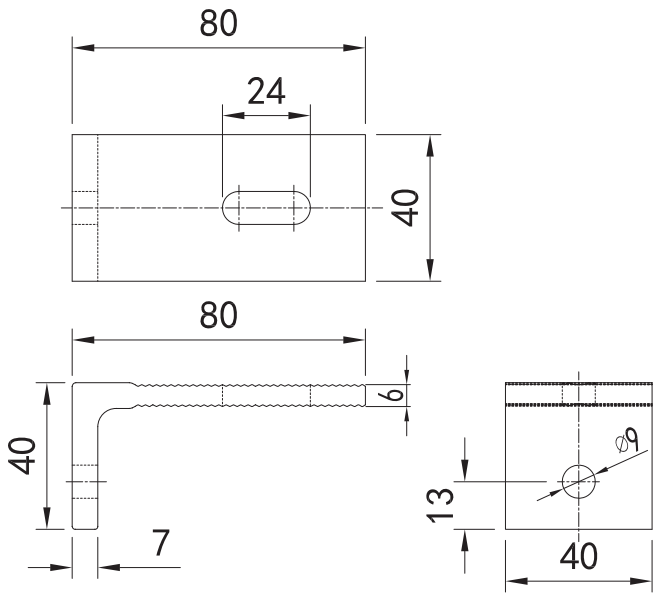

Component List（Qty./Set）			
L Feet	1	SUS 410 Wood Screw M6.3*75	1
Rubber Washer	1	T Nut	1
SUS304 Washer Set	2	Hexagon Bolt Set (M8*20)	1

Adjustable Mid Clamp

Product Name	35mm Mid Clamp
Product Code	GM-MC-35-A-D
Application	For framed pv module of 35mm thickness (with Goomax Rails)
Dimensions	W37XH 49XL 40mm
Weight	0.067KG
Material	AL6005-T5
Surface Finish	Anodized (10 micron)
Packaging	300pcs/carton, 500x300x210mm
Standard	CE/TUV/UL



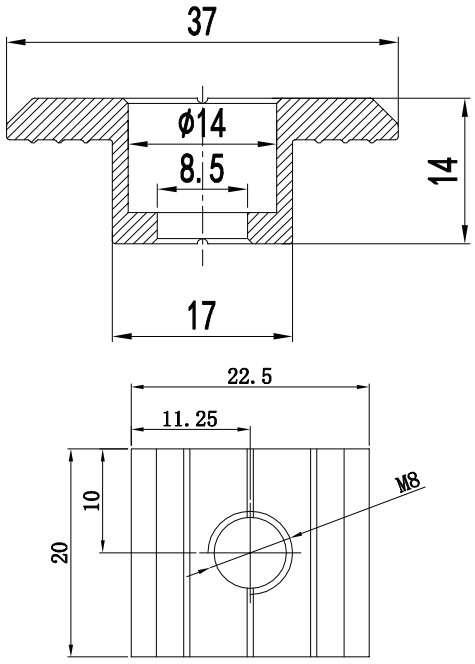

Component List（Qty./Set）			
Mid Clamp	1	T Nut	1
SUS304 Washer	1	Hexagon Bolt(M8*45)	1

End Clamp

Product Name	35mm End Clamp
Product Code	GM-EC-35-D
Application	For framed PV module of 30mm thickness (with Goomax Rails)
Dimensions	W34.5xH55x L40mm
Weight	0.054kg
Material	AL6005-T5
Surface Finish	Anodized(10 micron)
Packaging	300pcs/carton, 500x300x210mm
Standard	CE/TUV/UL

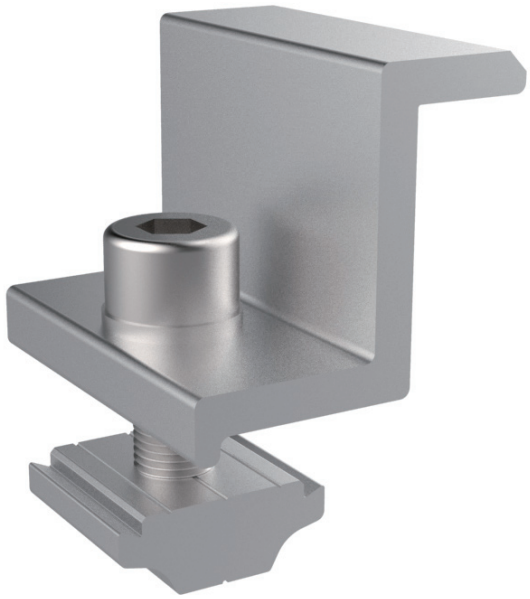

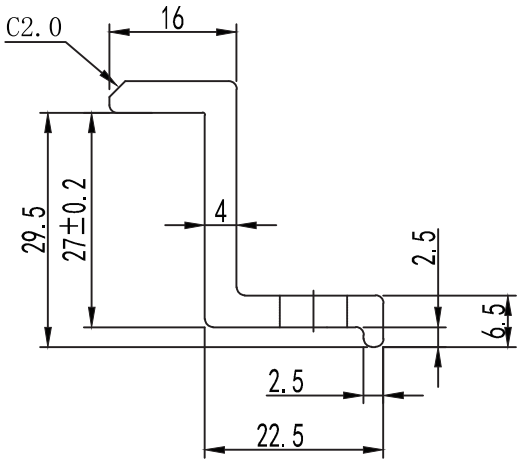

Component List（Qty./Set）			
End Clamp	1	T Nut	1
SUS304 Washert	1	Hexagon Bolt(M8*25)	1

Earthing Clip

Product Name	Goomax Earthing Washer
Product Code	GM-E-EL-AZ
Application	Earthing Washers
Dimensions	L 30.1 xW 31.8mm
Weight	0.002 kg/pc
Material	SUS304
Packaging	100pcs/bag, 5000pcs/carton, 500x300x210mm
Standard	CE/TUV/UL

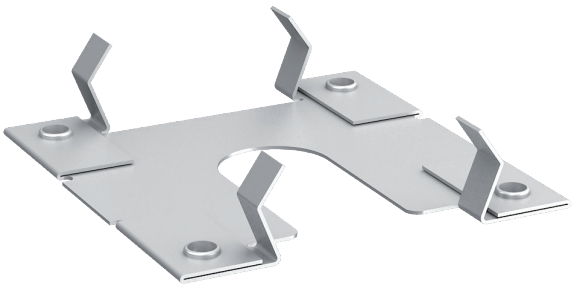

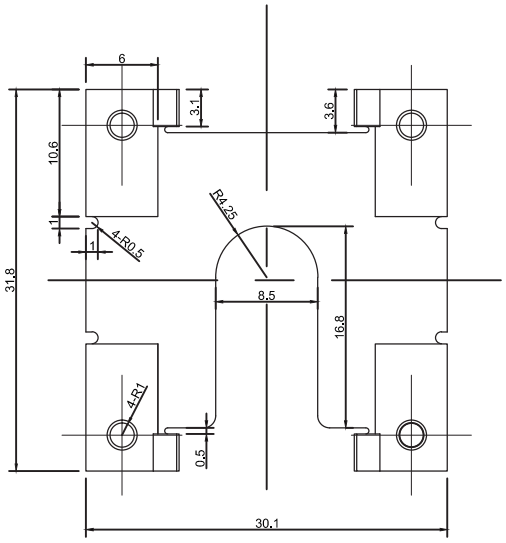

Component List（Qty./Set）	
Earthing Washer	1

Tilt

Product Name	Tilt Rear Arm 15/30
Product Code	GM-AS-400-D
Application	Metal Roof,Flat Roof
Dimensions	L 455xH 38mm
Weight	0.781KGS
Material	AL6005-T5,Screw:SUS304
Surface Finish	Anodized(10 micron)
Packaging	15pcs/carton,500*300*210mm
Standard	CE/TUV/UL



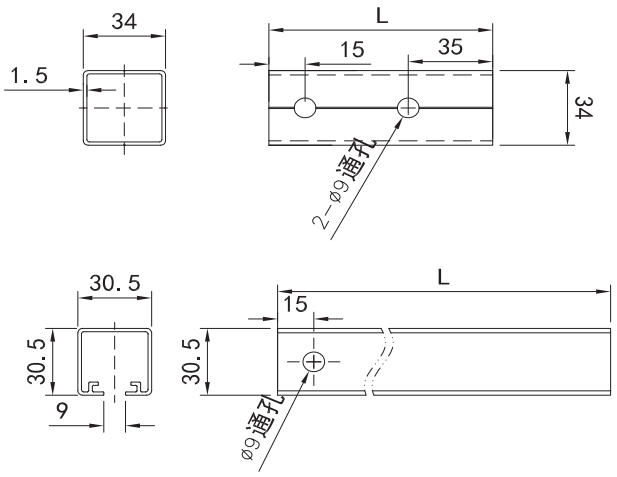

Component List（Qty./Set）			
Internal Tube	1	Hexagon Bolt Set (M8*20)	2
External Tube	1	Hexagon Bolt Set (M8*20)	2
L Feet	1	Hexagon Bolt Set (M8*60)	1
L Connector	1	T Nut	1
Rubber Washer	2	Aluminum Ring	1
SUS304 M8 Washer Set	5	SUS410 Wood Screw (M6.3*80)	2
Hexagon Bolt Set (M8*25)	1		

Tilt

Product Name	Tilt Front Arm
Product Code	GM-AS-B01-D
Application	Metal Roof, Flat Roof
Dimensions	L120xH38mm
Weight	0.29KGS
Material	AL6005-T5,Screw:SUS304
Surface Finish	Anodized(10 micron)
Packaging	60pcs/carton, 500x300x210mm
Standard	CE/TUV/UL



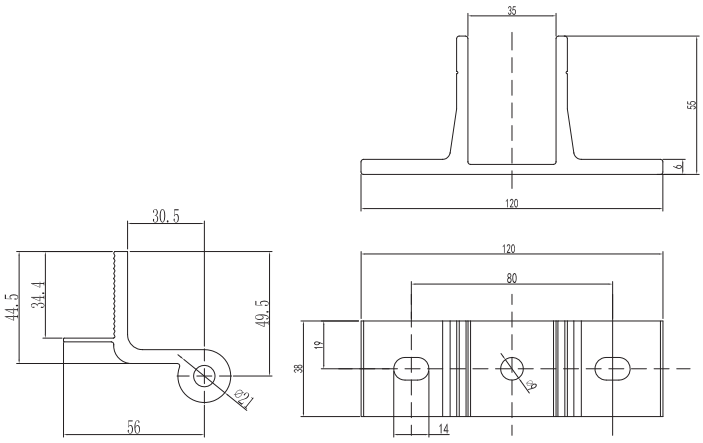

Component List (Qty./Set)			
Tilt Front Arm	1	M6.3*80 Bolt For Wood Purlin	2
L Feet	1	Hexagon Bolt set (M8*20)	1
T Nut	1	Hexagon Bolt set (M8*60)	1
SUS304 M8 Washer Set	2	SUS 304 M8 Washer Set	2